SZD-51-1 “JUNIOR”

Bookmarks can be used to locate sections of the document. Some bookmarks are expandable to show further detail.

Liability Disclaimer:

The Minnesota Soaring Club and its members are not responsible for errors or omissions in this electronic version of the SZD-1-1 Pilot’s Operating Handbook. Some sections or entries within sections may be illegible or difficult to read. Refer to the original SZD-1-1 Pilot’s Operating Handbook for accurate information.

PRZEDSIĘBIORSTWO DOSWIADCZALNO-PRODUKCYJNE
SZYBOWNICTWA "PZL-BIELSKO"

SZD-51-1 "JUNIOR" GLIDER

FLIGHT MANUAL

Issue I - December 1984

Reg. No ..... Fact. No X-132

This is the translation of Polish text approved by Central Administration of Civil Aviation

Translated by:

W.Stafiej D.Sc.

Stafiej

Issue I - December 1984	

No inscriptions or supplements are allowed to be introduced to this Manual if not approved by the Authority.

In case this Manual has been lost the Authority shall be informed immediately.

Everyone who finds this Manual is asked to mail it to the Ministry of Communication, Central Administration of Civil Aviation.

In this Manual the revisions contained in Bulletin No BE-001/85 "JUNIOR" have been introduced.

X-132

LIST OF REVISIONS

NOTE: Place where the text has been revised is marked with vertical line on the left side of text and with the item of revision.

Item	Page	REVISION	Date	Signature
1	7	Replaced with page 7A according to the Bulletin No BK-002/85 "JUNIOR"	85-07-15	
2	7 A	Increased aileron hinges	87-03-05	
3	41	Introduction of modified rear fitting-version II	88-03-31	
4	8	Revision chart No 279 Item "c" added	20.10. 1989	
5	27 28 40 41	Replaced with pages: 27A,28A,40A,41A due to design modifications Valid from B-2145	15 Feb. 1995	
6.	3 7A 18 19 20 44 45 53 54,55	Replaced with pages: 3X, 7X, 18X, 19X, 20X, 44X, 45X, 53X, 54X, 55X Valid for fact. No X-132.	1996. 05.15	

Druk:OWPT Bielsko-Biała

Item	Page	REVISION	Date	Signature

CONTENTS

	Page
1. DESCRIPTION OF GLIDER	7
1.1. General description	7
1.2. Main technical data	9
1.3. Instrument installation	9
2. OPERATION LIMITATIONS	10
3. PERFORMANCES	14
4. OPERATION OF GLIDER	15
4.1. Pre-flight inspection	15
4.2. Operations before flying	15
4.3. Pilot in cockpit	18
4.4. Procedures before take off	20
4.5. Controlling	20
4.6. Operations after flights	26
4.7. Assembling and disassembling	26
4.8. Road transportation	27
4.9. Directions for Mc Cready ring ...	29
5. DANGER AND EMERGENCY CONDITIONS ...	30
5.1. Landing in high plantation	30
5.2. Break off or unintended releasing of towing cable	30
5.3. Emergency exit and use of parachute	30

Druk:OWPT Bielsko-Biała /2000/466/82

6. FIGURES

Page

Fig. 1. SZD-51-1 "JUNIOR" glider 33

Fig.2. Instrument installation 35

Fig.3. Mc Cready ring for SZD-51-1 glider 36

Fig.4. Speed polar for SZD-51-1 glider . 37

Fig.5. Wing assembling 39

Fig.6. Horizontal tailpane assembling .. 41

Fig.7. Colour marking of airspeed indicator dial 43

Fig.8. Adjustment of pilot's back rest and seat 45

Fig.9. Allowed range of empty glider c.g. location 47

Fig.10. Operation of elevator trimming 49

Fig.11. Displacement of placards 51

7. PLACARDS 50

8. TABLE OF GLIDER WEIGHING 57

1. DESCRIPTION OF GLIDER

1.1. General description

SZD-51-1 "JUNIOR" is the school and training one-seater built on base of JAR-22 Requirements in "U" category. Glass-fibre/epoxy structure.

WING - in two panels of double-trapez planform Double T spar with longerons and web of glass-fibre composite. Sandwich coverings glass-fibre /foam/glass-fibre. Rear web of glass-fibre, ribless structure.

1. AILERON: undivided at 20 % of chord, mass balance, suspended on 4 points, actuated in one point. Glass-fibre structure.

AIR BRAKE: Plates of duraluminium sheet extended on upper surface only, equipped with caps fitted to wing contour.

FUSELAGE integral with fin, glass-fibre structure. The central part comprises the steel framework to which the wings and undercarriage are attached.

UNDERCARRIAGE: fixed, no shock absorber. Wheel of Ø 400x140 size with disc brake. Tube pressure of 1,5 at. Fixed rear wheel of Ø 200 diameter. The wheel brake and air brake controls are independent.

COCKPIT covered with one-piece canopy side opened. Nearly sitting pilot's position, adjusted on ground by means of adjustable back-rest. Pedals adjusted in flight. Instrument panel supported on column.

Druk:OWPT Bielsko-Biała /2000/460/a2

Adjustable air-conditioning, airflow directed on canopy front part and pilot`s face.

TAIL UNIT : "T" - arrangement. Rudder, stabilizer and elevator of glass-fibre structure.
Elevator divided on two parts, each one suspended on three points. Both elevator halfs are equipped with fixed glass-fibre tabs to increase the hinge moment. The rudder covered with fabric, mass-balanced suspended on two points.

EQUIPMENT : instruments /listed in item 1.3/, sanitary installation and first-aid kit.
The aerial incorporated into fin structure to enable the use of transceiver.

HOOKS : The glider is equipped with front and bottom hooks in one of the following combinations /acc. to user`s order/ :

a/ Both hooks of SZD-III A 56P type without the self - releasing mechanism, or

b/ Front hook of TOST E72 type without the self - releasing mechanism and bottom hook of TOST G72 type with the self-releasing mechanism, or

c/ Front hook of SZD III A56P type without the self-releasing mechanism and bottom hook of TOST EUROPA G72 type with the self-releasing mechanism.

The kind and type of hook is related on the placard in cockpit. The hooks are accesible from cockpit : the front one - when the instrument panel and its column are removed, the bottom one - when the seat pan is removed.

Both hooks are released by means of pulling the common control hand-grip. When the hand-grip is released the hooks are closed due to the return spring action. When winch-launched using the bottom hook of TOST type with self-releasing mechanism

the glider releases the cable automaticaly when the cable reaches the maximum release angle.

MOVABLE EQUIPMENT: assembling lever, screwdriver, wrench for wheel brake adjustment canvas cover for canopy.

1.2. Main technical data

Span	15,00 m
Length	6,69 m
Height	1,57 m
Dihedral of wing	3^0
Wing area	12,51 m^2
Aspect ratio	18
Root chord	1,115 m
Mean Standard Chord	0,88 m

Wing section: Wortmann SO2-196 //SO2/1-158
Mass of empty glider with standard equipment is 200 to 240 kg see Fig.9

All-up mass	380 kg
Minimum wing mass	105 kg

1.3. Instrument installation /Fig.2/

The installation comprises:

- instrument panel,
- total pressure head located at fuselage nose,
- 2 static pressure ports located on front fuselage part,

- ducts, drainage units and four-way connector,
- nest for the additional pressure head on the fin.

The instrument panel is attached to its column by means of screw located in face wall of panel and shielded on top with the cover fixed to the cockpit board.

The "standard" equipment comprises the following instruments:

- airspeed indicator PR-250-S
- altimeter W-10S or W-12S
- variometer WRS-5D with KWEC-2 compensator and bottle
- slip and turn indicator EZS-3
- Compass BS-1

The place for installation of special instruments provided on instrument panel and on its column.

2. OPERATION LIMITATIONS

1. Maximum permissible mass of empty glider with standard equipment ..... 240 kg
2. Permissible loading mass: ..... 140 kg
   where: minimum cockpit load ..... 55 kg
   maximum cockpit load ..... 110 kg
3. Maximum all-up mass ..... 380 kg
4. Limit load factor ..... +5,3g;-2,65 g
5. Ultimate load factor ..... +7,95g;-3,97g

6. Distance of c.g of empty glider with standard equipment aft of wing root leading edge /glider in attitude acc.to item 6 of Technical Service Manual/ ..... see Fig9
7. Allowable range of c.g. location in flight referred to Mean Standard Chord — 22,7 to 44,9 per cent of Mean Standard Chord
8. Loading plan

   Correct value and location of load masses is listed on LOADING PLAN placard /see page 53/.

N O T E S:

1. The location of balancing mass B in instrument panel for pilots of mass below 57 kg is not obligatory, when the glider is equipped with RS-6101 transceiver or TA-03A oxygen equipment or additional equipment of mass more than 1 kg in instrument panel.
2. In case the oxygen bottle is installed on the framework of central fuselage part /acc.to Annex No 2 to this Manual/ the maximum allowable additional loading mass B in instrument panel is 5 kg in the full range of pilot's mass up to 110 kg
3. Installation of load E other than oxygen bottle of TA-03A equipment on the central fuselage part framework should be accepted by the Authority.

4. When flying without the parachute the additional back-cushion of min 9 cm thickness /when pressed/ should be used.

5. In case the glider is loaded in way other than stated in Loading Plan /e.g for pilot's mass other than allowable cockpit mass/ the mass value of all-up glider and c.g. location shall be defined by weighing the glider with full load.

9. Flight limitations — IAS airspeeds km/h

a/ Take-off and aerotowed flight up to ..... V_T = 150

b/ Winch - launching with airspeed up to ..... V_W = 130

c/ Diving with airspeed:

in smooth air ..... V_{NE} = 220

in gust conditions ..... V_B = 155

d/ Extending of and flight with airbrake extended

in smooth air ..... V_{NE} = 220

in gust conditions ..... V_B = 155

e/ Manoeuvring airspeeds

up to ..... V_A = 155

f/ Maximum load factor:

n_A = +5,3 g at airspeed .. V_A = 155

g/ Maximum load factor:

n_D = +4,2 g at airspeed .. V_{NE} = 220

h/ Aerobatic manoevvres:
- looping
- stall turn
- quick half-roll-half-loop
- spiral
- spinning

i/ Altitude flying allowed providing that the glider is equipped with efficient oxygen equipment.

j/ Bungy take-off allowed.

10. Restrictions:

The glider is not allowed for:

- night flying
- winch - launching on front hook

11. Additional statements:

a/ When aerotowing the cable safety link of 690± 10 % daN shall be used /Standard: BN-65/3833-45/

b/ Before the first flight the pilot should be familiar with Flight Manual.

c/ When towed, the flight below the airplane level is not recommended since the cable contacts the fuselage surface.

d/ Flying in ice-condition should be limited only to unavoided cases.

e/ At V_{NE} = 220 km/h airspeed the rudder and aileron deflection is allowed as 1/3 of full deflection. The small gentle elevator deflections are allowed.

Druk:OWPT Bielsko-Biała /2000/466/82

f/ At V_A = 155 km/h airspeed the full control surfaces deflection is allowed.

3. PERFORMANCES: /fig. 4/

	GLIDER		
Al all-up mass of	260 kg	333 kg	380 kg
At mass loading of	20,8 kg/m²	26,6 kg/m²	30,4 kg/m²
Minimum sinking speed	0,54m/s	0,58 m/s	0,64 m/s
at airspeed of ..	62 km/h	70 km/h	77,5 km/h
Maximum L/D	35	35	35
at airspeed of ..	70 km/h	80 km/h	85 km/h
Sinking speeds at airspeeds of V km/h	m/s	m/s	m/s
100	1,08	0,96	0,90
110	1,31	1,16	1,08
120	1,57	1,37	1,28
130	1,91	1,60	1,50
140	2,30	1,88	1,75
150	2,75	2,22	2,05
160	3,24	2,67	2,42
170	3,78	3,12	2,82
180	4,54	3,60	3,25

4. OPERATION OF GLIDER

4.1. Pre-flight inspection

Before the flights it shall be inspected:

- integrity of structure and coverings,
- securing of assembling elements and control system joints,
- operation of control systems,
- operation of hooks /front and bottom, if installed/,
- undercarriage condition, rollability of main and tail wheels, operation of wheel brake,
- air pressure in tube and tyre, cleaness of undercarriage housing,
- pilot's safety belts,
- total and static pressure ports /clean if necessary/,
- operation of instruments.

4.2. Operations before flying

4.2.1. Opening and locking of the canopy

The Canopy is side opened and fixed on two hinges at right board.
In emergency the hinges are released when the emergency jettisoning levers are moved forwards /red ball at right side/. On left side opposite to emergency jettisoning lever is situated the canopy locking lever accesible from outside through the window.

4.2.2. Inserting of towing cable

/1/ Pull the releasing grip full.

/2/ Insert the small ring of cable end into the hook and release the grip.

/3/ CHECK THE CORRECT CABLE LOCKING PULLING IT SEVERAL TIMES !

Two hooks can be installed on the glider /see page: 8/.

4.2.3. Transportation on airfield

The glider with locked canopy can be towed by motor-car or tractor with speed up to 10 km/h. The towing rope not shorter than 4 m.

NOTE: THE MANOEUVRING WITH GLIDER ON MUD STICKY GROUND ESPECIALY BACKWARDS MAY CAUSE THE MUD TO JAM THE TYRE TO FENDER AND RESTRICT THE WHEEL ROLLABILITY.
CLEAN BEFORE TAKE-OFF !

4.2.4. Anchoring of glider

1. Put the glider into position to have the side-back wind

2. Anchor the glider on the following points:

Wing: the wing tip directed toward wind should be supported on 30-50 cm height, wrap with seat-cushion and attache with anchoring cord to the picket or anchor-rod in distance of about 50 cm from wing tip.

Fuselage: Fix the tail part to the pickets or anchor-rods sticked to ground on both sides.
Wrap the fuselage tube near the fin with anchoring cord. Avoid the contact of pickets with fuselage surface. Anchor the fuselage front part by means of front or bottom hook.

The aileron and elevator shall be immobilized by means of right pilot's back belt joined with right abdomen belt on the control stick hand grip.

Rudder: should be immobilized by means of clamp /for fin and rudder/ made of two wooden slats joined on ends.

Air - brake: should be extended and secured by means of immobilizing the hand grip in cockpit using the left pilot's back-belt.

4.2.5. Procedures with wetted glider

In respect to structure /glass-fibre/ the glider is moisture and meteorological influences resistant. In case of heavy wetting e.g. landing on water or long standing on field when country landed, the structure inside should be ventilated by means of opening the inspection holes, canopy and extending the air brake. When dried the glider should be wiped with a flannel.

4.2.6. Drainaging of instrument pneumatic installation

After flight in prolonged rain /or in cloud/ it is necessary to:

1. Dry the drainage units and remove the drain plugs.

/2/ Disconnect the ducts of total and static pressure out of the instruments.

/3/ Blow through, if necessary, the ducts of total and static pressure heads /by means of pump for inflating the wheel tube/.

NOTE: BEFORE BLOWING THE DUCTS BE SURE THAT THE INSTRUMENTS ARE CORRECTLY DISCONNECTED OUT OF THE BLOWED PART OF INSTALLATION - THE DANGER OF INSTRUMENT DAMAGE.

/4/ Screw in the drainage unit plug, connect the installation and check the tightness.

4.2.7. Slip and turn indicator supply-inserting of batteries

Electric slip and turn indicator is supplied with direct current of 4,5 V taken from three round batteries of R20 type. The batteries are contained in round housing which is inserted into the bracket on right side of instrument panel.

NOTE: THE NEGATIVE POLE OF THE BATTERY SET SHALL BE DIRECTED AHEAD !

NOTE: THE USED BATTERIES SHALL NOT BE LEFT IN THE NEST !

4.3. Pilot in cockpit

The cockpit allows for pilots up to 1,95 m of height with back parachute.
To adjust the pilot's attitude, the glider is equipped with the adjustable 5-position back-rest.

For extremaly high pilot the back-rest should be removed, and pilot should rest directly on rear web of sitting pan /position 0 in table of loading plan - page 55/.

The pilot's position should be adjusted so, to allow for easy access to hook releasing handle and all control levers.
When flying without a parachute the additional cushion of thickness no less than 9 cm in pressed condition should be used.

The pedals are adjusted in flight /5 ~~locations~~ positions/
Pulling on the brown hand-grip /at right side of instrument panel column/ the pedals can be moved back or when pressed with both legs can be moved forwards.
When the leg force is released the latch locks the pedals in selected location.

The control systems of control surfaces and air brake are operated conventionaly.
The wheel brake lever is located on air brake control lever.
The spring trimming device is actuatedy by means of hand-grip on the left board.
Operation of this device acc. to Fig. 10 is the following:

- Press the hand-grip /release the locking/ and put into the desired location, than LOCK /pull upwards/.

The canopy opens when the left lock is released /red hand grip put forwards/.
In full opened position the canopy is retained by means of limiting cable.

4.4. Procedures before take-off

/1/ Check the completation of board equipment /glider log-book, Flight Manual tools, anchoring facilities, covers, rope for ground towing/.

/2/ Check the parachute rubber tension members and put the parachute on back.

/3/ Set the back-rest in proper position, take place in cockpit, adjust the pedals and fasten the safety belts.

/4/ Check the full movements of control surfaces and air brake. Adjust the trimming spring handle on position from "6" /for light pilot/ to "8" /for heavy pilot/ counting from front. For winch launching from "6" to "8" respectively.

/5/ Check the operation of slip and turn indicator.

/6/ Close the canopy and check the good locking.

4.5. Controlling

In school-flight the long towing cable should be used /minimum 40 m/. Before take-off adjust the trimming spring handle into position from "6" /light pilot/ to "8" /heavy pilot/ counting from front. During ground run till to airborning control the glider to roll on the main wheel.
The recommended aero-towing.airspeed when climbing is no less than 100 km/h.

4.5.2. Winch-launching - USE BOTTOM HOOK ONLY !

Prior to connection check the cable position. The cable should lay a slight bow line at left - NOT RIGHT ! - side of take-off axis. The trimming device put into position "6" /light pilot/ to "8" /heavy pilot/.

The take-off is correct and easy.
In steep climbing the stick forces are low.
The best launching airspeed ranges 95 to 105 km/h.
To get the maximum altitude at the end of climb path the stick should be pulled slightly. The forces are low even for incorrect trimming.

Before releasing it is recommended to easy the launching cable tension pushing the stick forwards.

In case of intended self-releasing /for TOST EUROPA G72 hook only/ the stick position should be retained till the self-releasing occurs.

When released the glider should be immediately introduced into normal glide ond the cable releasing handle pulled once more f for safety reason.

The longer the launching cable the higher altitude gained. For cable of 700 m length and for winch of 200 PS power the realeasing altitude at windless condition is 250 to 280 m.

4.5.3. Stalling

In straight flight the glider stalls only with light pilot /55 to 70 kg/, fuselage nose in above horizon position and considerable pulling movement of the stick.

Druk:OWPT Bielsko-Biała /2000/466/82

The stalling is warned by means of fuselage vibrations. At the airspeed of 55 km/h the glider drops down. If necessary the wing dropping can be avoided using the aileron. Recovery follows when the stick is moved forwards. The height loss is lower than 30 m.
In the flight with average /70 to 90 kg/ and heavy /90 to 110 kg/ pilots the fuselage vibrations appear at about 70 km/h.
The flight with stick full back is possible at about 68 km/h airspeed without dropping down.

The stalling in circling is possible also with light pilot. Fuselage vibrations appear similar as in straight flight. When dropping the glider increases its bank.
Recovery follows when the stick is moved forwards. The height loss is lower than 30 m.

In flight with average and heavy pilot the glider can circle with the stick full back, without nose dropping.

NOTE: THE ABOVE AIRSPEEDS CONCERN THE DRY GLIDER WITH AIR BRAKE RETRACTED.
THE RAIN, ICE, OR AIR BRAKE EXTENDED INCREASE THE STALLING SPEED !

4.5.4. Spinning

For all allowable loading conditions the glider can be safely entered into the spinning and recovered. At the front c.g. location /pilot of 90 to 110 kg/ the full control surfaces deflections are necessary to retain the glider in spinning /elevator, aileron and rudder deflected full towards

the rotation/. In other case the glider recovers automatically.

The other spinning properties are listed in table.

SPINNING PROPERTIES

Pilot kg	55 to 70	70 to 90	90 to 110
1	2	3	4
c.g location	rear	average	front
Way of entering	Enter stall and full deflection of elevator and rudder	Enter stall in bank. Full deflection of all control surfaces	
Recommended aileron deflection	towards the rotation or neutral		towards the rotation
Longitudinal oscillations	up to 3 turns		without oscillations
Possible: 1 turn 2 turns 5 and more turns	yes yes yes		yes yes no
Recovery delay	1/2 to 3/4 of turn	up to 1/2 of turn	0

SPINNING PEOPERTIES /CONT./

Height loss in one turn is 70 to 100 m.
Time for performing of one turn is 3 to 4 sec.

Recovery method - normal manoeuvre acc. to JAR 22 ACJ 22.221 Requirements:
1. Deflect the rudder against the rotation.
2. Short break.
3. Release the stick forwards till the rotation stops.
4. Neutralize the rudder and recover the glider out of diving.

Airspeed at recovering is 140 to 160 km/h

4.5.5. Circling and side-slip

Depending on bank and all-up mass of glider the circling airspeed is 80 to 85 km/h Time of bank reversal 45°/45° is about 3,4 sec.

The side-slip is entered at airspeed of 90 km/h and more by means of banking the glider with simulatneous opposite deflection of rudder. The bank up to 30° allows to retain the direction of flight, for greater bank angle the glider enters the turn. Depending on bank angle the airspeed indications drop down till to zero.

4.5.6. Air brake

High efficiency of air brake ensures the wide range of approach angles. Extending and rectracting of airbrake causes the unperceptable changes in pitch.
The air brake can be operated in the whole allowable airspeed range /above 180 km/h open gently/.

In diving with air brake extended at 220 km/h airspeed the flight path angle is greater than 45°.

4.5.7. Aerobatics

Before starting the manoeuvres the glider should be trimmed on 120 to 140 km/h airspeed and locking of trimming device and air brake checked.
The contents of luggage compartment and pockets in cockpit should be immobilized.
The glider performs correctly and smoothly the following manoeuvres:
loopings and stall-turns /entry airspeed of 165 to 175 km/h/, spirals /110 to 120 km/h/, quick half-roll-half-loop /90 to 95 km/h/.
Performing of these manoeuvres is the standard one.

4.5.8. Landing

Approach airspeed is 90-100 km/h /yellow mark on airspeed indicator dial/.
Approach angle should be adjusted with air brake. On the low altitudes the abrupt air brake extending should be avoided.
Touch the ground on two points /main and tail wheels/. On ground run the wheel can be braked.

4.5.9. First flight

Before the first flight pilot should be familiar with operation limitations and other informations contained in this Flight Manual.
It is recommended to make the first flight in thermics. The flight programm should comprise: circling, stalling in straight

Druk:OWPT Dialoko-Dial (2000/466/x2

flight and turn, flight with increased airspeed /100 to 200 km/h, depending on altitude and weather conditions/ and operating of air brake /several times/.

4.6. Operations after flights

1. Switch-off the slip and turn indicator and all other electrical equipment.
2. Drain the ducts of instrument installation if necessary, acc. to item 4.2.6.
3. Clean the cockpit and whole glider.
4. Make the inspection /as pre-flight one acc.to item 4.1./.
5. Put on the dry canvas covers ON DRY AND CLEAN GLIDER ONLY !

4.7. Assembling and disassembling

4.7.1. Tools

Assembling lever

4.7.2. Assembling of wings /Fig.5/

1. Put the airbrake handle in cockpit into front position, put the stick into the plane of glider symmetry.
2. Retract the airbrake plates, put ailerons into neutral position.
3. Put together the right and left wing with fuselage. When inserting the wing arms /1/ the protruding pivots of spars and fuselage framework /3/ should enter the proper nests /4/ on the root ribs of wing. The connections of aileron and air brake control system should be rigged too.

4. Hitch the assembling lever /5/ into the feet /6/ of spars and pull the wings towards fuselage finally.
5. Connect the wings with bolt /7/ and secure inserting the pin arm into the hole /8/ and close the safety pin /9/.

4.7.3. Disassembling of wings /Fig. 5/

Disassembling requires the reversal sequence in respect to item 4.7.2. Take off the bolt /7/ and remove the wings.

4.7.4. Assembling of horizontal tailplane /Fig. 6/

1. Handle of spring trimming in cockpit should be moved into its front location.
2. Put on the tailplane /1/ onto the fin /2/ with elevator deflected upward, pay attention that the rollers /3/ of the elevator lever slide into the guides /10/ of the push-rod end.
3. Connect the fittings inserting the bolt /5/ into the hole in fin leading edge and secure it with safety pin /6/.

4.7.5. Disassembling of horizontal tailplane /Fig.6/

Disassembling requires the reversal sequence in respect to item 4.7.4. Remove the bolt /5/ and take-off the tailplane.

4.8. Road transportation

To prepare the disassembled glider for road transportation it is necessary to:

1. Check the completation of glider part and equipment.
2. Immobilize the contents of the cockpit and luggage compartments.
3. Immobilize the stick by means of pilot's belts.
4. Protect against dirt the rollers quides of elevator control system in the fin.
5. Lock the ailerons and rudder /put on the fixators/.
6. Close and lock the canopy, shut the window.
7. Put the dry canvas covers on the canopy, fuselage, wings, tail unit and secure against a dust the opened bearings of control systems, the assembling elements of wings and elevator /wrap with paraffined paper or rags/.

When installed on a trailer the glider can be fixed on:

- external surfaces by means of wide clamps upholstered with soft material or by means of ribbons,
- wings on spar root-ends,
- fuselage on main and tail wheels.

4.9. Directions for McCready ring

Scale on calculation ring of variometer for SZD-51-1 glider. /Glider all-up mass 333 kg wing loading 26,6 kg/m^2/

Ring km/h	70	80	90	100	110	120	130	140	150	160	170
Vario-meter m/s	0,0	1,0	1,35	1,7	2,1	2,65	3,5	4,7	6,0	7,0	8,1

Parametres of cross-country flight in conditions without air descending zones. /Glider all-up mass 333 kg, wing loading 26,6 kg/m^2/.

Average climb m/s	0,5	1,0	1,5	2,0	2,5	3,0	3,5	4,0	4,5	5,0
Inter-thermal airspeed km/h	87	105	125	130	137	142,5	147	157	165	170
Cross-country speed km/h	34,5	51	62,5	72,5	79,5	85,5	91	96	100,5	105

Druk:OWPT Bielsko-Biała /2000/466/82

5. DANGER AND EMERGENCY CONDITIONS

5.1. Landing in high plantation

When landing in high corn or grass the glider is exposed on damage when hitches even slightly the wing and makes the ground-looping. In unavoided cases the landing should be possibly precise.
The plantation surface should be assumed as ground surface. On ground the main wheel should be braked.

5.2. Break-off or unintended releasing of towing cable

When the cable breaks or is unintended released on low altitude it is necessary to :

1. Release the hook /when the cable remained with glider/.
2. Fasten the back belts.
3. Select the place for landing. In case of unavoided collision with an obstacle in field landing DO NOT ALLOW FOR FRONT CRASH !

5.3. Emergency exit and use of parachute

The parachute exit is the only possibility of pilot's rescue if the glider cannot come to ground in an controlled maner, e.g. in case of:

- fire or damage making the flight impossible
- serious missdisposition of pilot /e.g. injured eyes/,

- lack of visibility due to the cloud covering ranging up to ground.

5.3.1. Procedures for emergency exit

/1/ Let the stick free.

/2/ Push forward up to stop the handles of canopy jettisoning and push the canopy upwards.

/3/ Release the safety belts.

/4/ Leave the cockpit towards axis of eventual rotation of glider.

/5/ If the altitude allows delay the opening of parachute. On altitude below 200 m open the parachute immediately.

5.3.2. Procedures in special cases

/1/ When the canopy cannot be jettisoned try to destroy the perspex begining near the window, eventually help with legs.

/2/ In case the exit must be done on high altitude take into account:

a/ possibility of climbing on opened parachute /e.g.in cloud/ and the danger of lack of oxygen or iceing of parachute,

b/ possibility of employ the oxygen equipment installed on glider,

c/ air temperature.

Taking the above into account it may be recommended to stay inside the cockpit /if glider condition allows for/ to altitude of 4500 - 4000 m or even lower.

Druk:OWPT Bielsko-Biała /2000/466/82

F I G U R E S

Fig. 1 SZD-51-1 "JUNIOR" glider

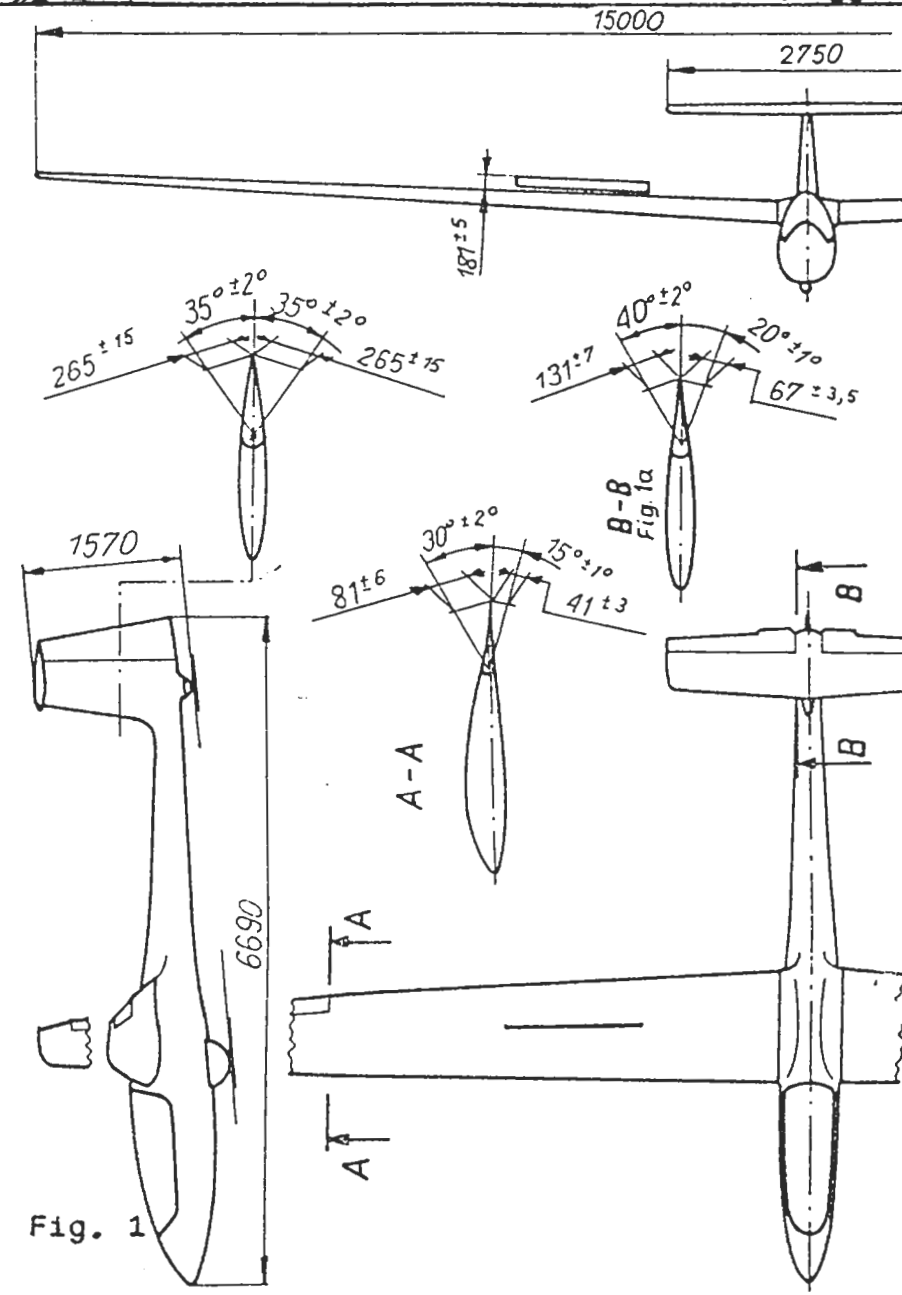

Fig. 1

Druk:OWPT Bielsko-Biała /2000/466/82

Fig. 2. INSTRUMENT INSTALLATION

1 - airspeed indicator PR-250 S seria B**
2 - altimetr W-10S /or W-12S/
3 - variometer WRs-5D with KWEC-2 compensator and McCready ring
4 - compass BS-1 /or KI-13A/
5 - Slip and turn indicator EZS-3
6 - static pressure heads
7 - total pressure head
8 - drainage units
9 - duct connector
10 - bottle
11 - instrument panel assembling screw
12 - instrument panel column
13 - electrical variometer x/
14 - nest of K=-1 pressure head
15 - K=-1 pressure head x/
16 - bottle x/

x/ Additional equipment
**/ Or alternatively PR-400S-A

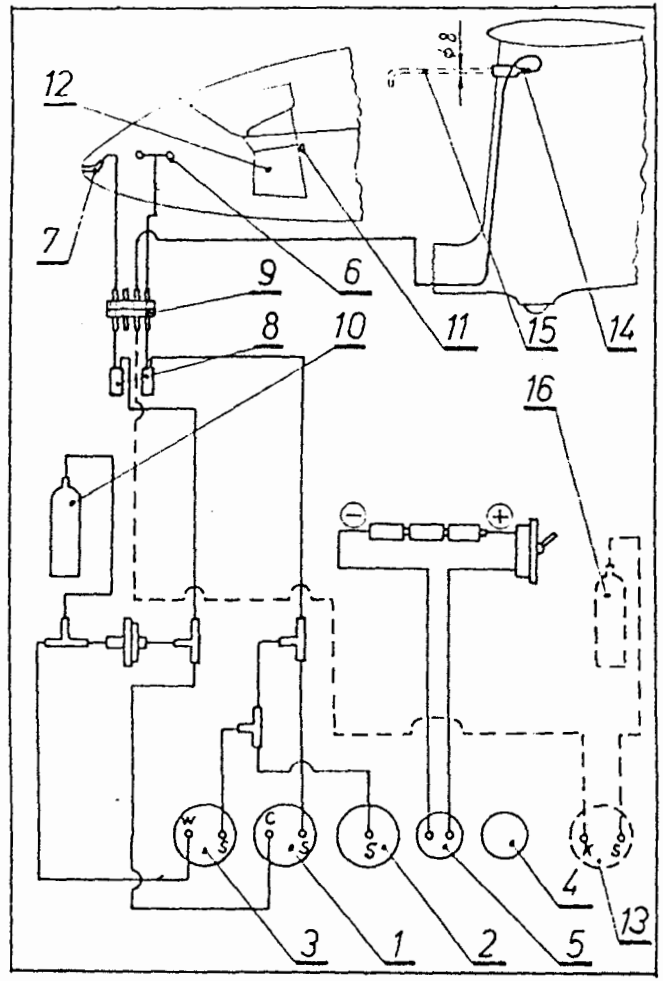

Fig. 2

Druk:OWPT Bielsko-Biała /2000/466/82

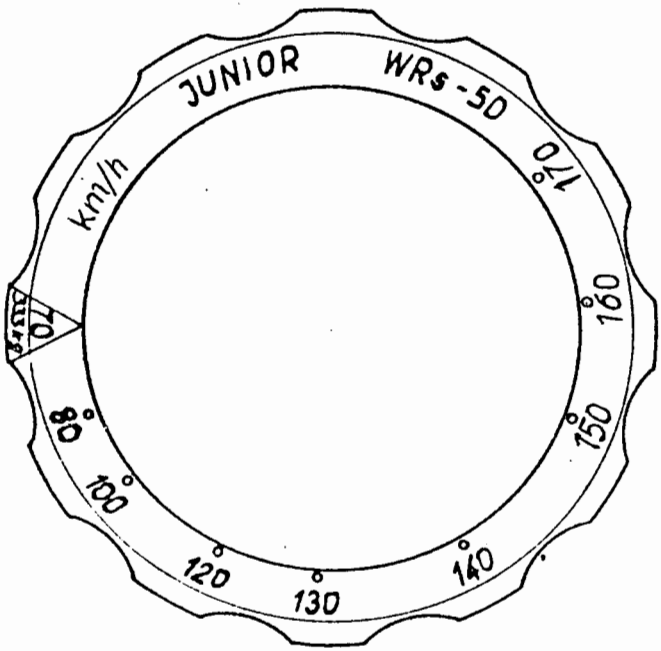

Fig.3 Mc Cready ring for SZD-51-1 glider

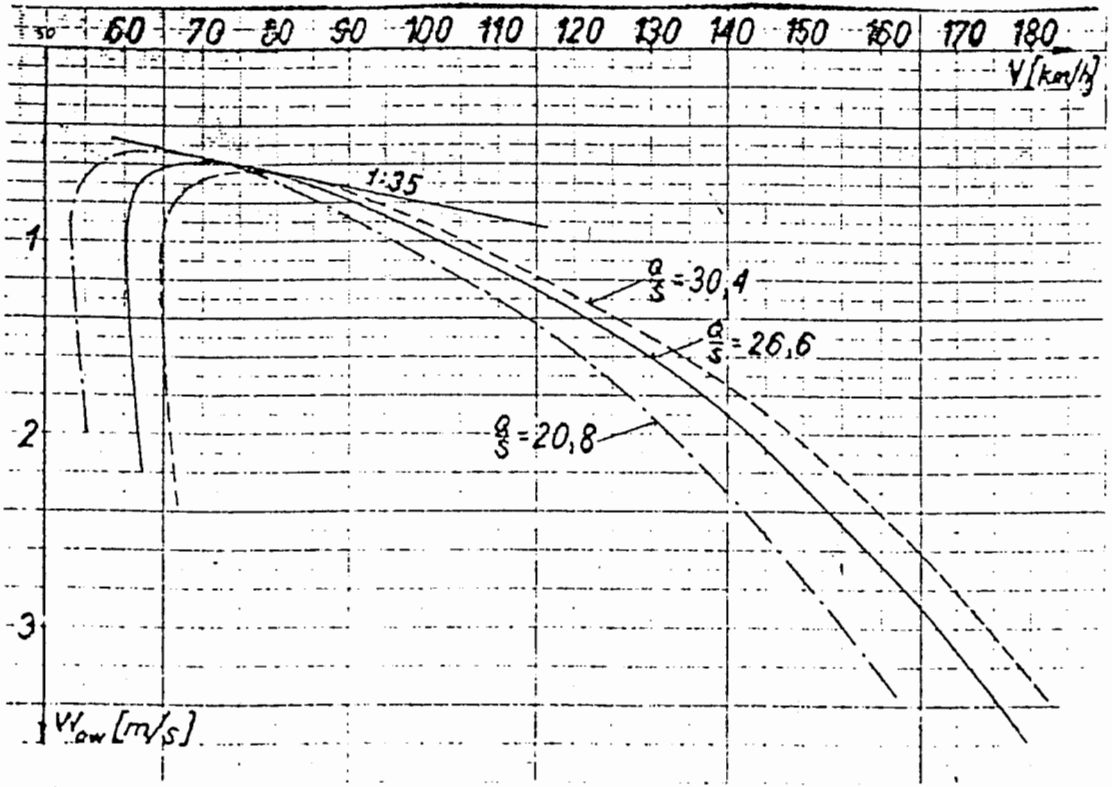

Fig. 4 Speed polar for SZD-51-1 glider

Fig. 5. Wing assembling

1 - Wing spar ends
2 - fuselage pivots
3 - spar pivots
4 - nests for pivots
5 - assembling lever
6 - spar feet
7 - bolt
8 - securing hole
9 - safety pin

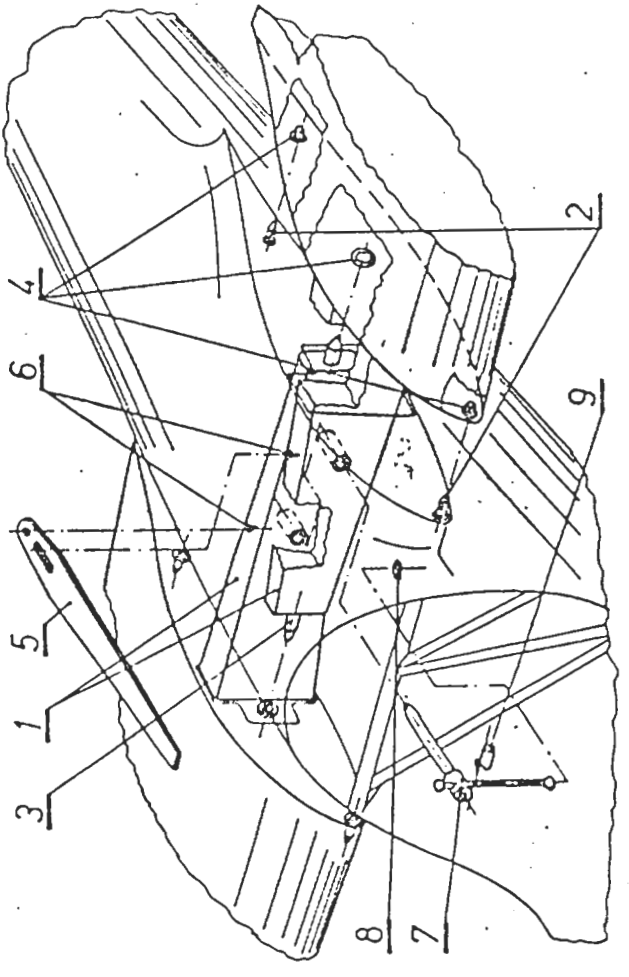

Fig.5

Fig.6. Horizontal tailplane assembling

1. Horizontal tailplane
2. Fin
3. Rollers
4. Elevator lever
5. Bolt
6. Safety pin
7. Tailplane fitting screw
8. Nut
9. Split pin
10. Guides
11. Stops

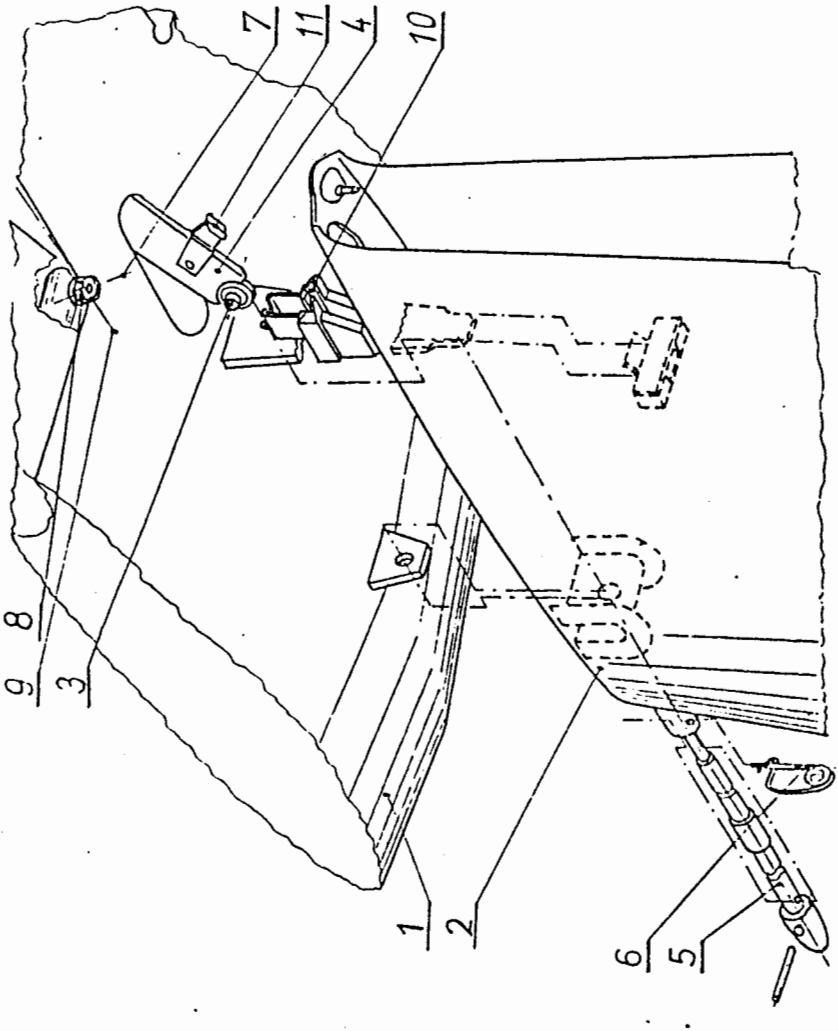

Fig.6.

Fig. 7. Colour marking of airspeed inicator dial

- red

- yellow

- green

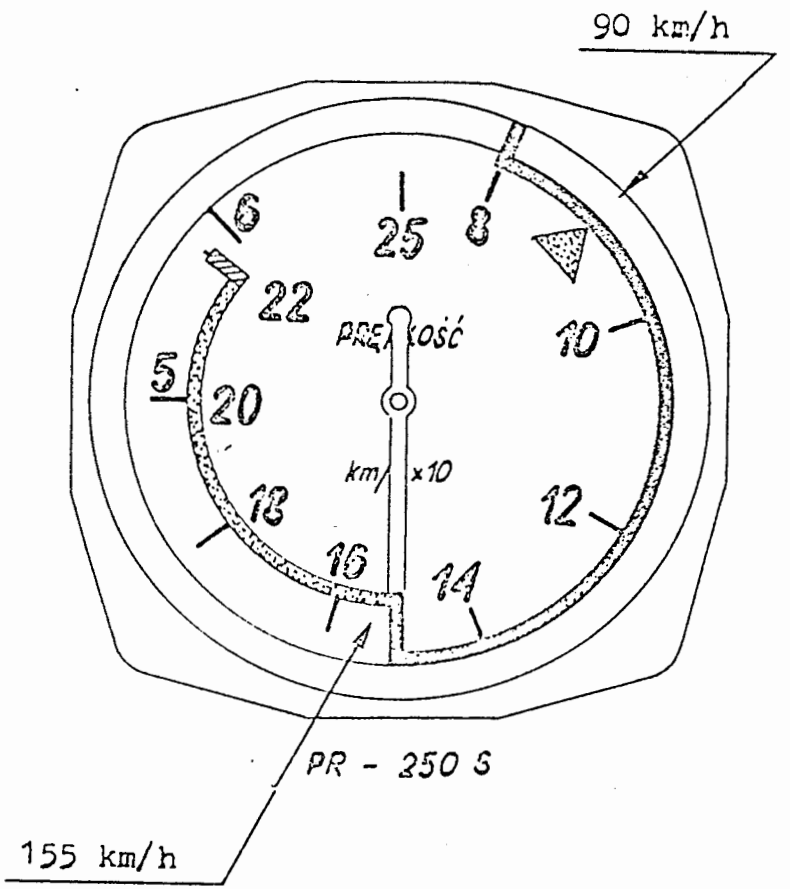

Fig. 7

Druk:OWPT Bielsko-Biała /2000/466/82

Intentionally left blank

Intentionally left blank

Fig. 8.

Druk:OWPT Bielsko-Biała /2000/466/82

Fig. 9. Allowable range of empty glider c.g. locations in respect to root rib leading edge, X_{SC}

For details see Technical Service Manual - chapter 6.

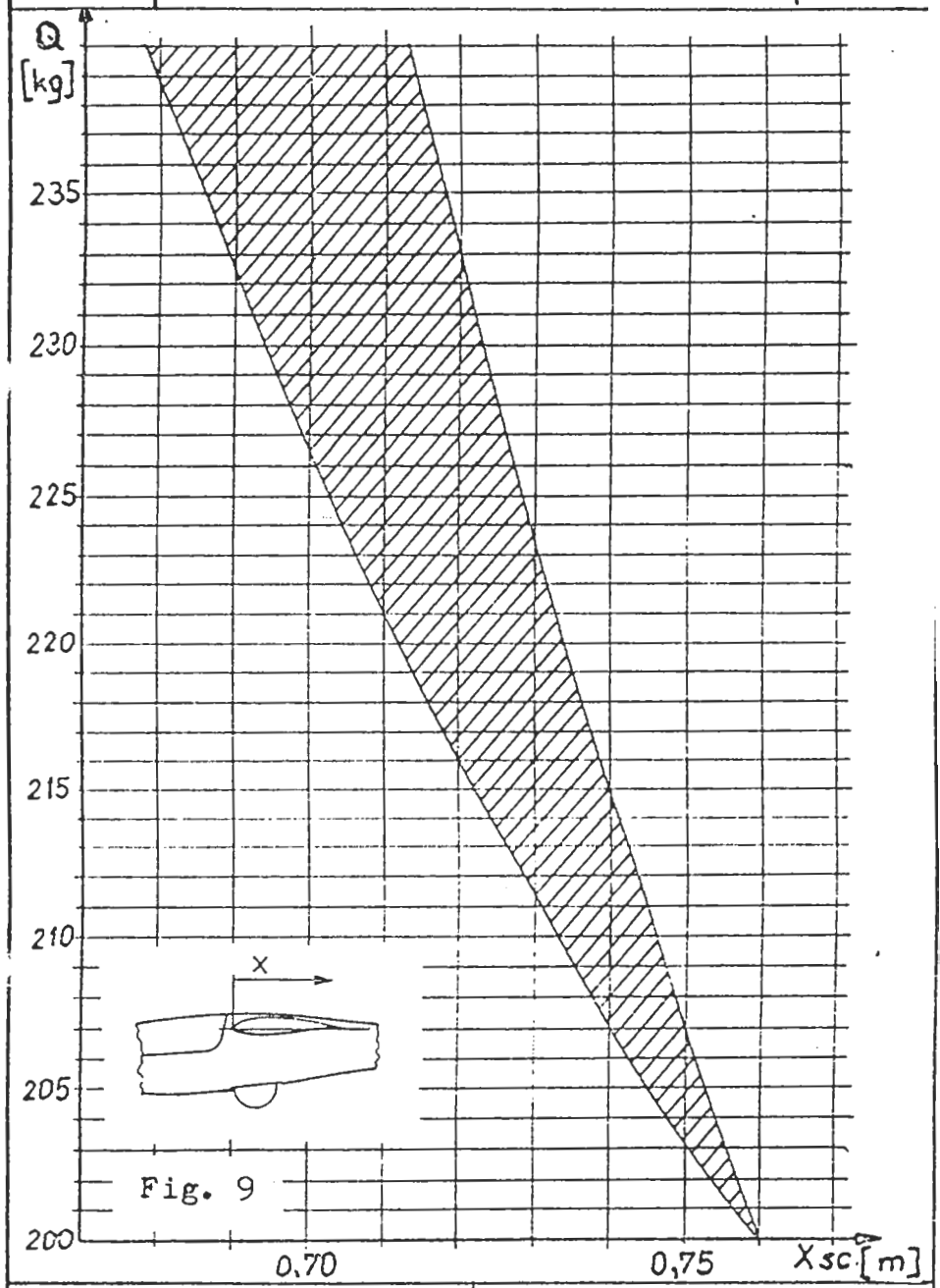

Fig. 9

Druk:OWLT Bielsko-Biała / 2000/166/62

Fig. 10. Operation of trimming device

1 - press

2,- change the location

3 - release, check the locking

A - will be tail heavy

B - will be nose heavy

C - Flight direction

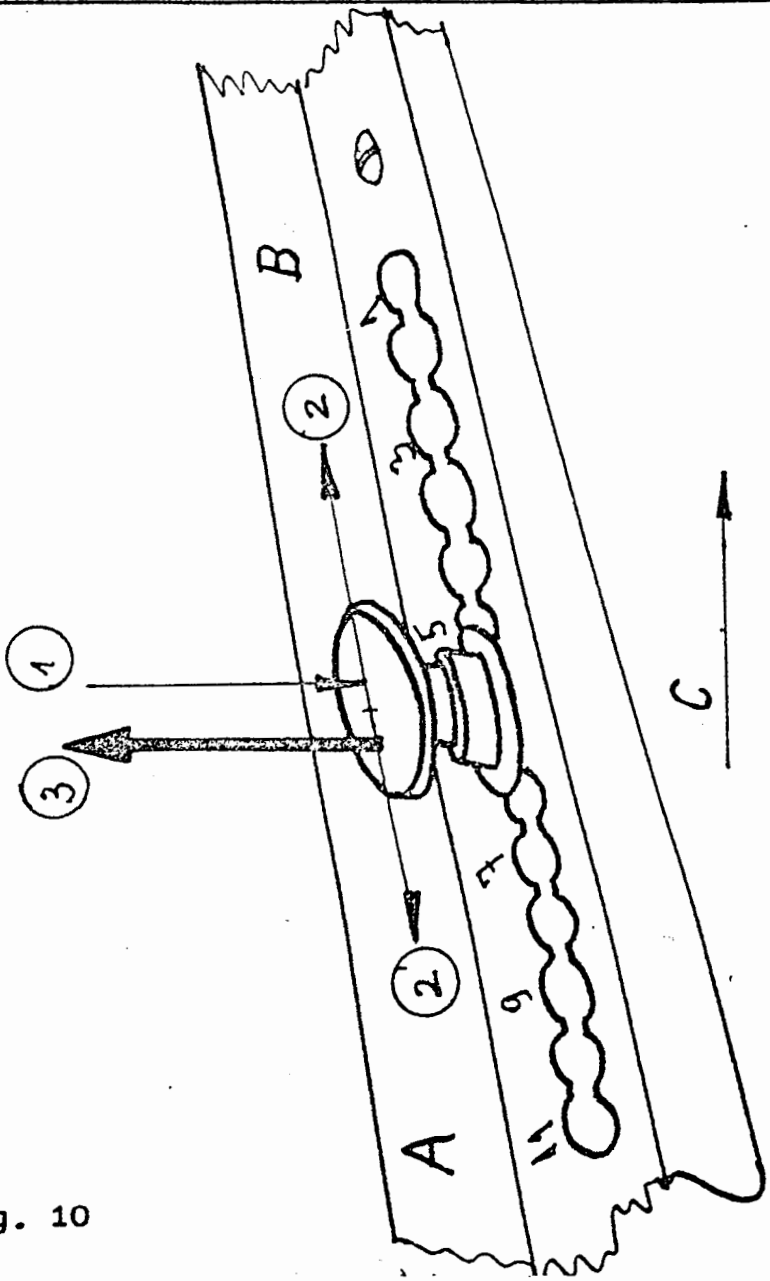

Fig. 10

Druk:OWPT Bielsko-Biała /2000/466/82

7. PLACARDS

Placard No	Meaning	Page:
1.	Air brake extended	52
2.	Emergency canopy jettisoning	52
3.	Trimming device	52
4.	Releasing of towing cable	52
5.	Pedal adjustment	52
6.	Air conditioning of cockpit	52
7.	Wheel brake	52
8.	No smoking	52
9.	Luggage compartment	52
10.	Sanitary installation	52
11.	Compass correction	52
12.	Turn indicator switch on/off	52
13.	Max. 10 kg	52
14.	Seft luggage max. 5 kg	52
15.	Operation limitations	53
16.	Loading plan	55
17.	Factory identification placord	55
18.	Bottom hook without self-releasing	53
19.	Bottom hook with self-releasing	53
20.	Trimming device locations	53

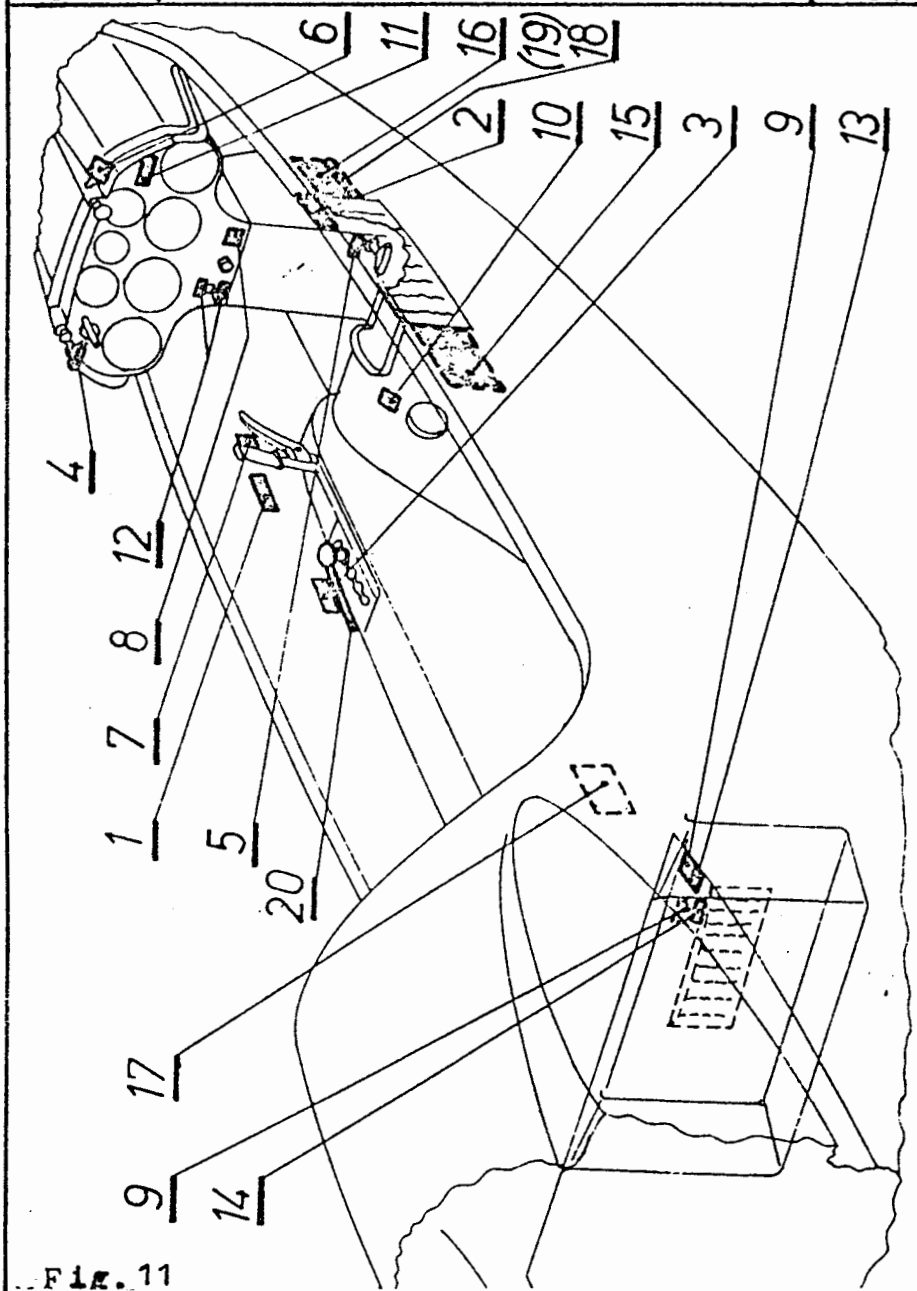

Fig. 11

Druk:OWPT Bielsko-Biała /2000/466/82

X-132

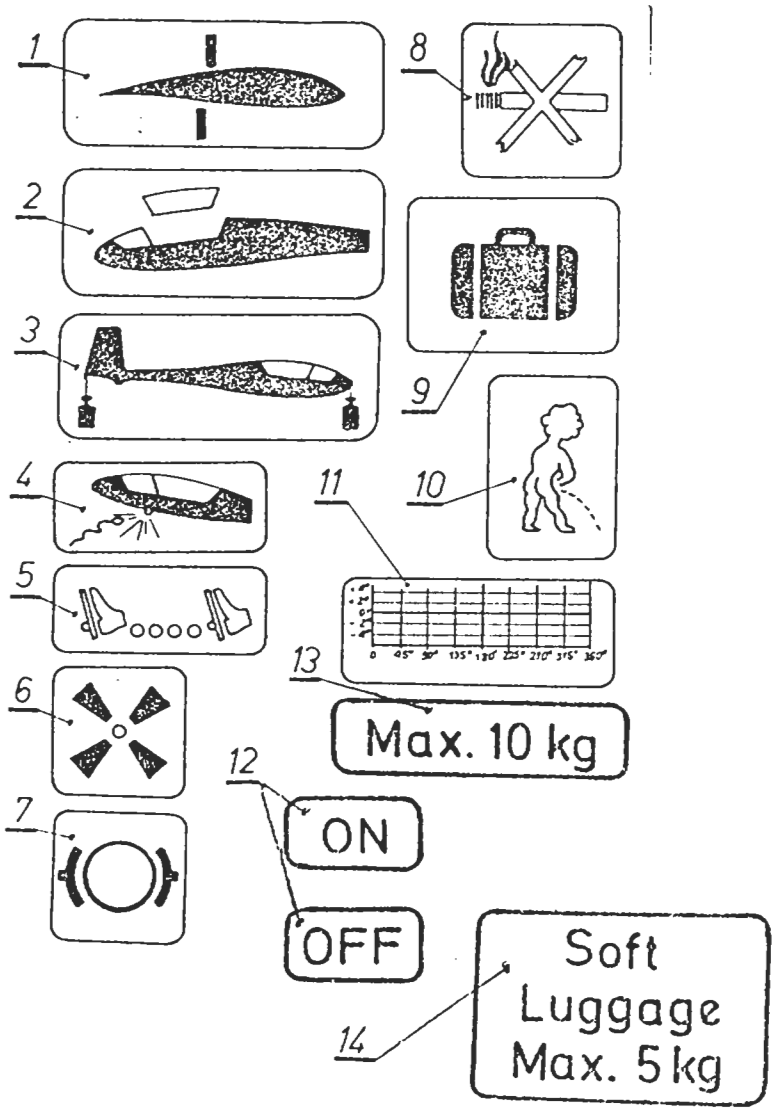

SZD-51-1 JUNIOR

FLIGHT LIMITATIONS

AIRSPEED IAS		km/h
V_W	WINCH-LAUNCHING	130
V_T	AERO-TOWING	150
V_A	MANOEUVRING	155
V_B	GUST CONDITIONS	155
V_{NE}	DIVING	220
15 MASSES		kg
ALL-UP		380

AEROBATIC MANOEUVRES: looping, stall turn, quick half-roll-half-loop, spiral, spinning

18 BOTTOM HOOK WITHOUT SELF-RELEASING SZD-III A-56P

19 BOTTOM HOOK WITH SELF-RELEASING TOST G 73

20 11 • 9 • 7 • 5 • 3 • 1

Description of loading plan.

B - balancing or additional equipment mass in instrument panel

PILOT - mass of cockpit load

ROP - adjustable pilot`s back-rest

- front back-rest position /1/

- 1,2,3,4,5 back-rest positions, or without back-rest

- without back-rest

C- soft luggage in compartment behind the seat

D - battery, barograph etc.

E - oxygen bottle of 4 l capacity.

N O T E S:

1. The balancing mass B in instrument panel for pilot`s mass lower than 57 kg is not obligatory providing that the glider is equipped with RS-6101 transceiver, or TA-03 A oxygen equipment or additional equipment in instrument panel of mass above 1 kg.
2. If the oxygen bottle is installed in the fuselage central part framework/acc. to Annex No 2 to this Manual/ the maximum allowed mass of load B in instrument panel is 5 kg for the full range of pilot`s mass up to 110 kg.

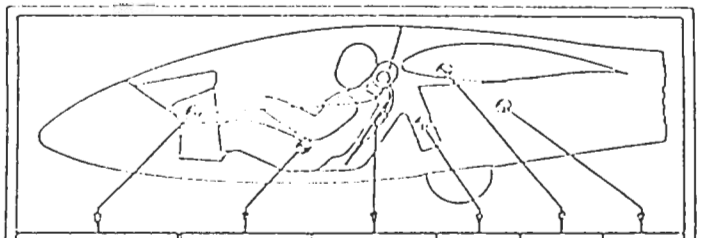

16

B kg max	B kg min	PILOT kg	ROP	C kg	D kg	E kg
5	1	55		max 5	max 10	max 10
	0.5	56				
	0	57				
		58÷107	12345 0			
4.5		108	0			
4		109				
3.5		110				

17

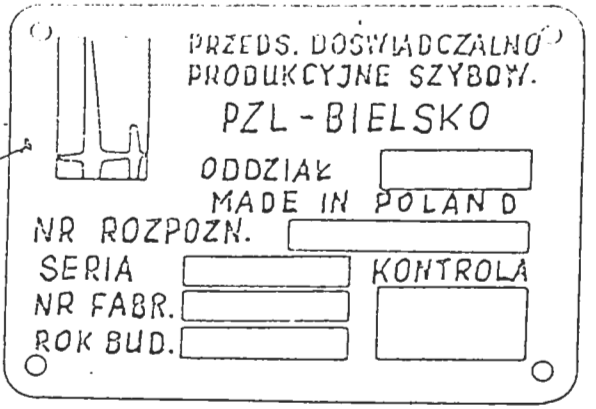

Druk:OWPT Bielsko-Biała /2000/466/82

The empty glider c.g. shall comply with the allowed range /Fig.9/. If not, the glider shall be balanced by means of installing the fixed balancing mass /acc. to Technical Service Manual item.6.1./.

The final weighing results are written down by the factory. In case of repairs or changes of equipment the c.g. location shall be checked and if necessary, move it into the allowed range under supervision of Authority.

The weighing results shall be written down into the table on page 57.

8. TABLE OF GLIDER WEIGHING

Date of weighing	Empty glider mass kg	C.g. location $X_{c.g}$ cm	Additional balancing mass kg		Performed by:	Authority:
			front	rear		
9.05.1994	224,8	72,6	2,5	—	[illegible]	INSPEKTORAT KONTROLI CYWILNYCH MINISTRA POMIESZKANIA I GOSPODARKI PRZESTRZENNEJ